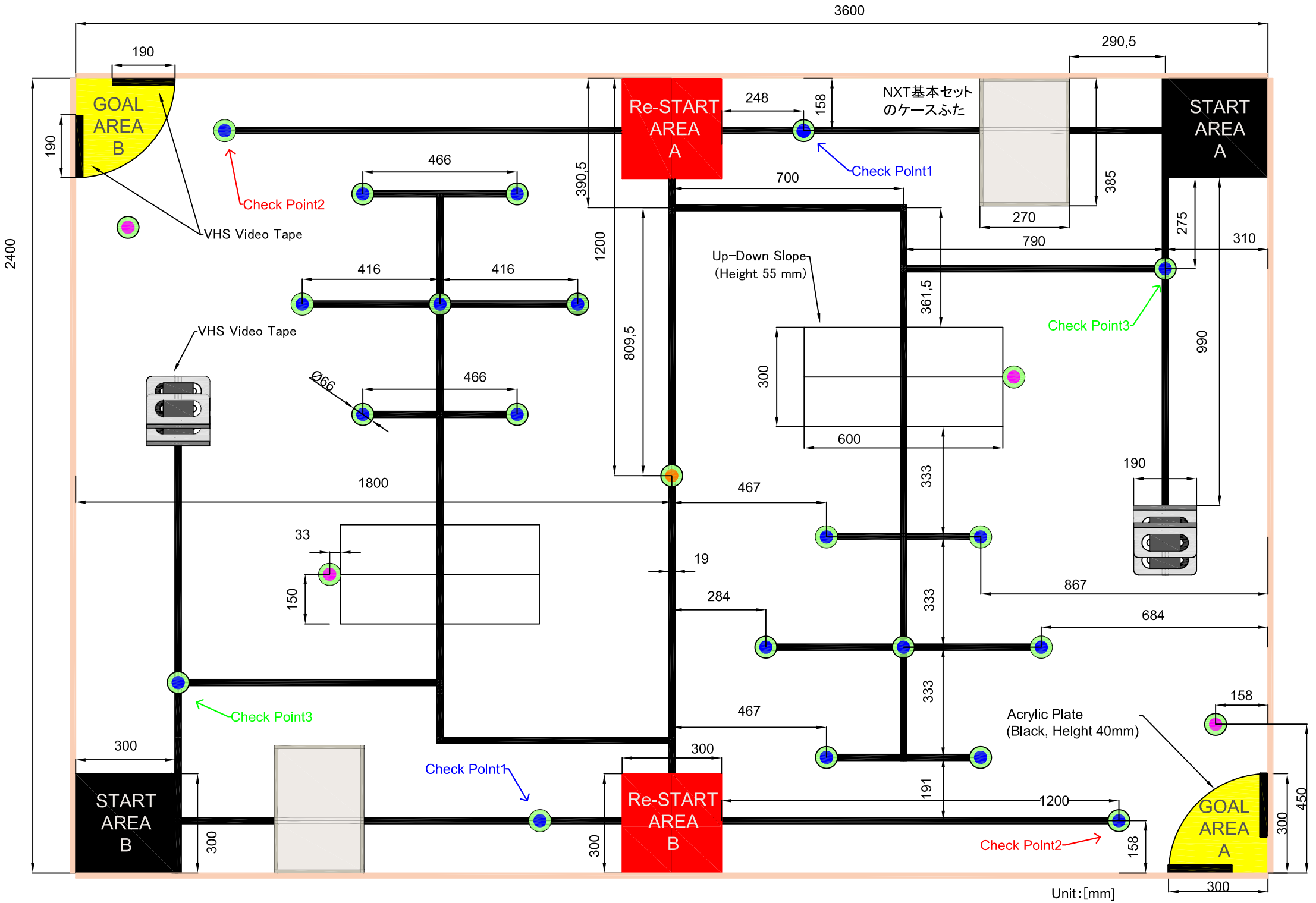

3600
290,5
190
GOAL AREA B
190
2400
Re-START AREA A
248
158
NXT基本セットのケースふた
START AREA A
Check Point1
Check Point2
VHS Video Tape
466
390,5
700
385
270
275
310
790
1200
Up-Down Slope (Height 55 mm)
416
416
361,5
Check Point3
VHS Video Tape
809,5
990
300
Ø66
466
600
190
1800
467
333
33
19
150
867
284
333
684
333
Check Point3
158
467
Acrylic Plate (Black, Height 40mm)
300
300
Check Point1
191
1200
START AREA B
Re-START AREA B
GOAL AREA A
300
300
300
Check Point2
158
450
300
Unit:[mm]